PAGE	140

BY	CHK	REVISION RECORD MODIFICATIONS	DATE	REV.
ALLEN		RELEASE TO PRODUCTION	2007,8,4	1.0

SPECIFICATION
Current Rate: 3 AMP
Insulation Rrsistance: 1000mΩMin
Contact Resistance: 20mΩMax
Dielectric voltage: 1000V AC for one minute
Operation Temperature: -40℃to +105℃

MATERIAL
Insulator: Polyester,UL94v-0
◎Standard: P.B.T
Contact Pin: Brass
Finish: Tin, Gold Plated
◎Standard: Gold Flash all over

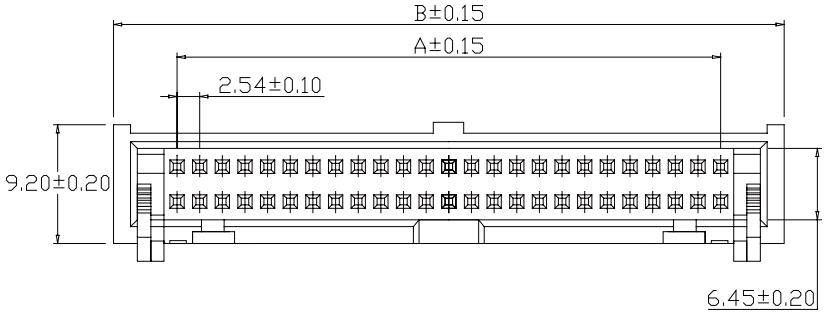

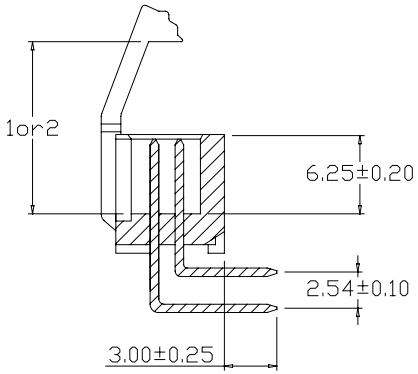

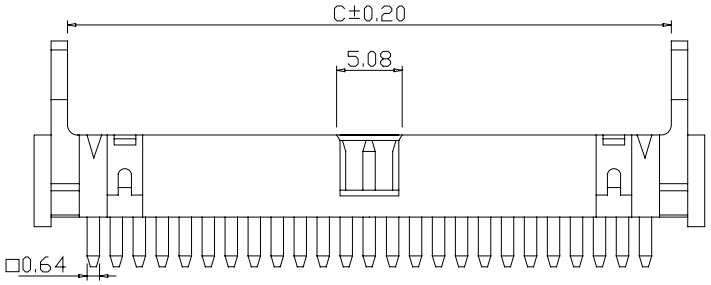

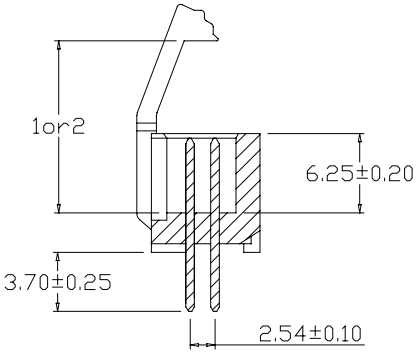

Circuits	DIMENSION		
	A	B	C
10	10.16	20.32	14.94
14	15.24	25.40	20.02
16	17.78	27.94	22.56
20	22.86	33.02	27.64
26	30.48	40.64	35.26
30	35.56	45.72	40.34
34	40.64	50.80	45.42
40	48.26	58.42	53.04
50	60.96	71.12	65.74
60	73.66	83.82	78.44
64	78.74	88.90	83.52

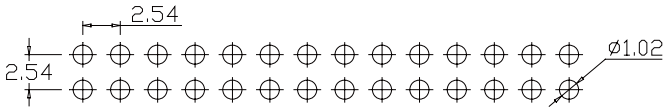

Recommended PCB Layout
(PCB YOLERANCE±0.05)

E D H 1 X S L - X X X B X - L

- X: S:Straight / R:Right Angle
- XX: No.of contacts
- X: G:Gold flah / GA:Gold 5u' / GB:Gold 10u' / GC:Gold 20u' / GD:Gold 30u' / T:Tin Plated / S:Selective / SA:Selective5u' / SB:Selective10u' / SC:Selective20' / SD:Selective30' / TE:Tin200u'
- B: B:BlackInsulator
- X: 1:14.55mm / 2:10.65mm
- L: L:RoHS+P.B.T

APPRO	CHECK	DRAWN	PART NO.	EDH1XSL-XXXBX-L			DESCRIPTION
			ITEM NO.				
			DRAW NO.				
			UNIT	mm	SCALE	no	
			TOLER		NO.		

Tel: 0769 22020068 Fax: 0769 22020069 E-mail: sales@vigortec.com